AENOR TRADE MARK FOR CLAY ROOFING TILES AND FITTINGS TECHNICAL FORM Nº:

MANUFACTURER	MAZARRON TEJAS S.L.
MADE IN:	NUMANCIA DE LA SAGRA (TOLEDO)
TILE DESCRIPTION:	SIDE AND HEAD INTERLOCKING ROOF TILE UNE EN 1304
BRAND NAME:	MIXED ROOF TILE 10

AENOR Producto Certificado

STATED CHARACTERISTICS

REQUIRED

Nominal dimensions (mm)

		Length	Width
Individuals	X	497	294
Overlap			

Over and Under Tiles

Maximum width	Minimum width
-	-

Impermeability

Category 1	X	Test method 1	X
Category 2		Test method 2	

Frost resistance. Method E

Level 1 (nº cycles passed without damages ≥ 30)	
Level 2 (nº cycles passed without damages ≥ 90)	
Level 3 (nº cycles passed without damages ≥ 150)	X

PTIONAL CHARACTERISTICS ANNEX D RP 34 (

	YES	NO
Impermeability (D.2 RP 34.02)	X	
Frost Resistance (D.3 RP 34.02)		X

TILE SKETCH

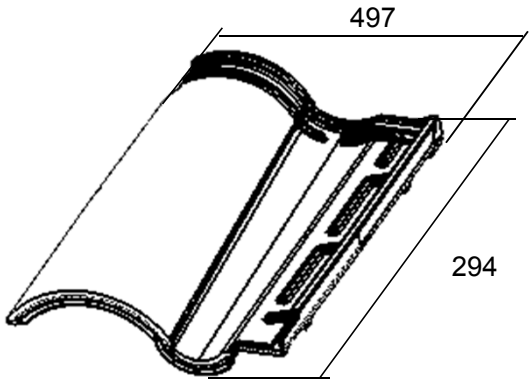

Piece without water repellent treatment

VALUES RULES FROM AENOR

Structural faults (% faults)		EN 1304	≤ 2,5
Length tolerance (%)		EN 1024	± 2,0
Width tolerance (%) (not applicable in Over and Under tiles)		EN 1024	± 2,0
Uniformity of the transverse profile (mm) (Only for Over and Under Tiles)		EN 1024	≤ 15
Camber/Twist (%)	L > 300 mm	EN 1024	≤ 1,5
Camber/Twist (%)	L ≤ 300 mm	EN 1024	≤ 2,0
Impermeability (cm^3/cm^2/día)	Mean value	EN 539-1	≤ 0,5
Impermeability (cm^3/cm^2/día)	Individual value	EN 539-1	≤ 0,6
Impermeability (cm^3/cm^2/día)	Mean value	D.2 RP 34.02	≤ 0,3
Impermeability (cm^3/cm^2/día)	Individual value	D.2 RP 34.02	≤ 0,4
Flexural strenght (N)		EN 538	≥ 1200
Frost resistance (cycles)		EN 539-2 (Method E)	≥ 150
Frost resistance (cycles)		D.3 RP 34.02	N/A
Fire reaction perfomance		EN 13501-1	A1
External fire perfomance		EN 13501-5	Broof

Additional information given by the manufacturer (1)

Unitary mass (in grams):	4750
Roof tiles number in m^2 (with one decimal):	10
Length distance between battens (cm):	44
Surface finish:	ENVEJECIDA,EXTREMEÑA,RIAÑO,BROWN,ELEGANCE, GARONNE, CREAM, NUMANCIA, etc
Mass coloration:	RED - BROWN
Fixing types:	FIXING GROOVE/ HOLE PREPARED TO BE NAILED
Further information:	

Accesories:

LEFT AND RIGHT SIDE FINISHING , UNIVERSAL SIDE FINISHING, HALF TILE, VENTILATION TILE, OUTLET TILE, CHIMNEY, RIDGE, THREE WAY RIDGE, END RIDGE, ETC.

(1) AENOR is not responsible for the information in this square, the responsibility is exclusively and only for the manufacturer's.

Water repellent treatment if is requested

Issued date:
Supersedes and replaced the one dated: